BEMF
EMI/EMC FILTER

3Ø, 500Vac (6/10/16/20/30A) : 삼상 교류 500V 표준형
BTL-5***-SD Series (Standard type)

■ Features
Standard type
Multi mount structure
Dual PE system
Light weight
Low cost
DIN Rail available

■ Typical Applications
General purpose
Automation equipments
Motor drive equipments
AVR, UPS, Inverter, Converter
Semiconductor manufacturing equipment

■ Technical specifications

Items	BTL-5006-SD	BTL-5010-SD	BTL-5016-SD	BTL-5020-SD	BTL-5030-SD
Rated Voltage (V_R)	3Ø, 500Vac				
Operating frequency	50 / 60Hz				
Rated Currents @40℃ (I_R)	6A	10A	16A	20A	30A
Withstanding voltage test	Line to Earth : 2,828Vdc for 1min. or 3,650Vdc for 2sec. (BHSTD-QUA-Q201)				
Insulation resistance	500Vdc for 1min. 300MΩ Min. (BHSTD-QUA-Q202)				
Leakage current	4.6mA Max. at rated voltage (BHSTD-QUA-Q203)				
Voltage drop	1.0V Max. (BHSTD-QUA-Q204)				
Temperature range	25/100/21 (-25℃ to +100℃), 20~95% RH at Operating & Storage				
Designed according to	IEC/EN 60939 / UL1283 / CSA 22.2 No.8				
Weight [g] (Max.)	525	510	530	515	505

■ Circuit Diagram

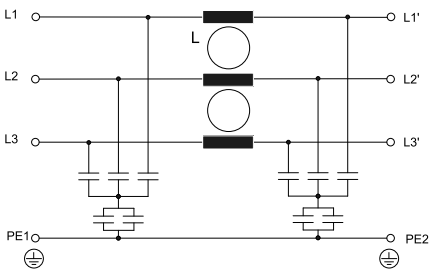

■ Shape & Dimension (mm)

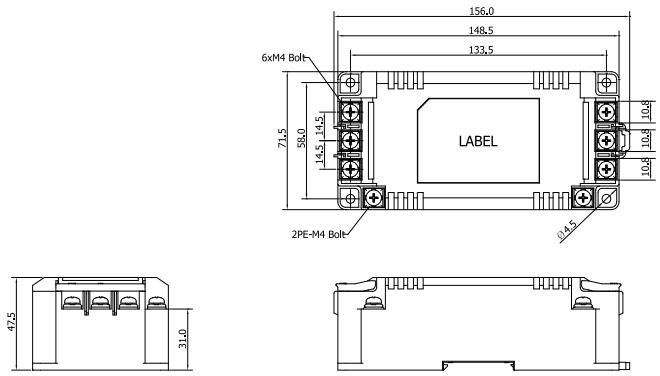

■ Derating Curve

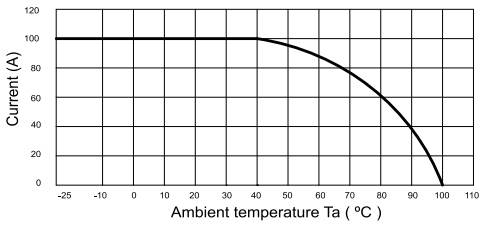

■ Lug ring terminal

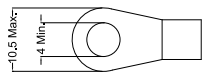

■ Recommended torque

1.2 ~1.4 N · m

94-5, Deokcheon-ro, Manan-gu, Anyang-si, Gyeonggi-do, 14086 Republic of Korea
Tel. +82-31-465-8897 Fax. +82-31-465-8890 www.bh21.co.kr bh@bh21.co.kr